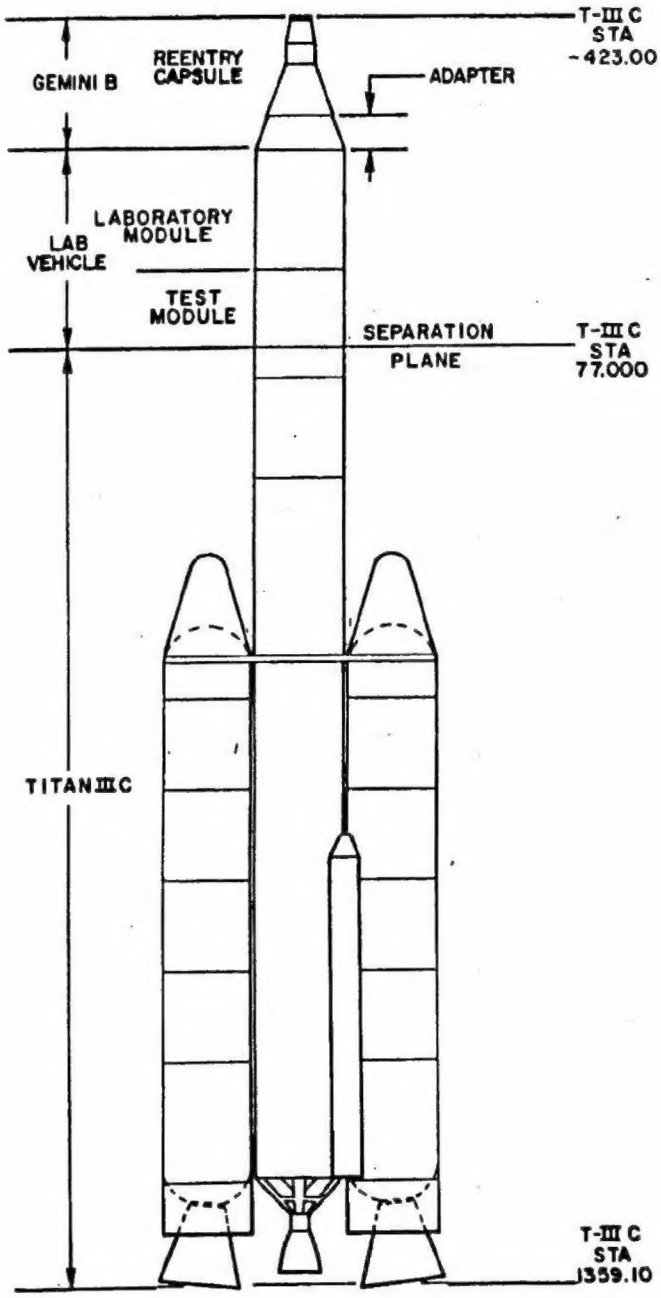


Figure 6.0-1. MOL Flight Vehicle





This document contains information affecting the national defense of the United States within the meaning of the Espionage Law, Title 18, U.S.C., Section 793 and 794, the transmission of which in any manner to an unauthorized person is prohibited by law.

NRO APPROVED FOR RELEASE 10 JUNE 2014

NRO APPROVED FOR RELEASE 10 JUNE 2014



SECRET

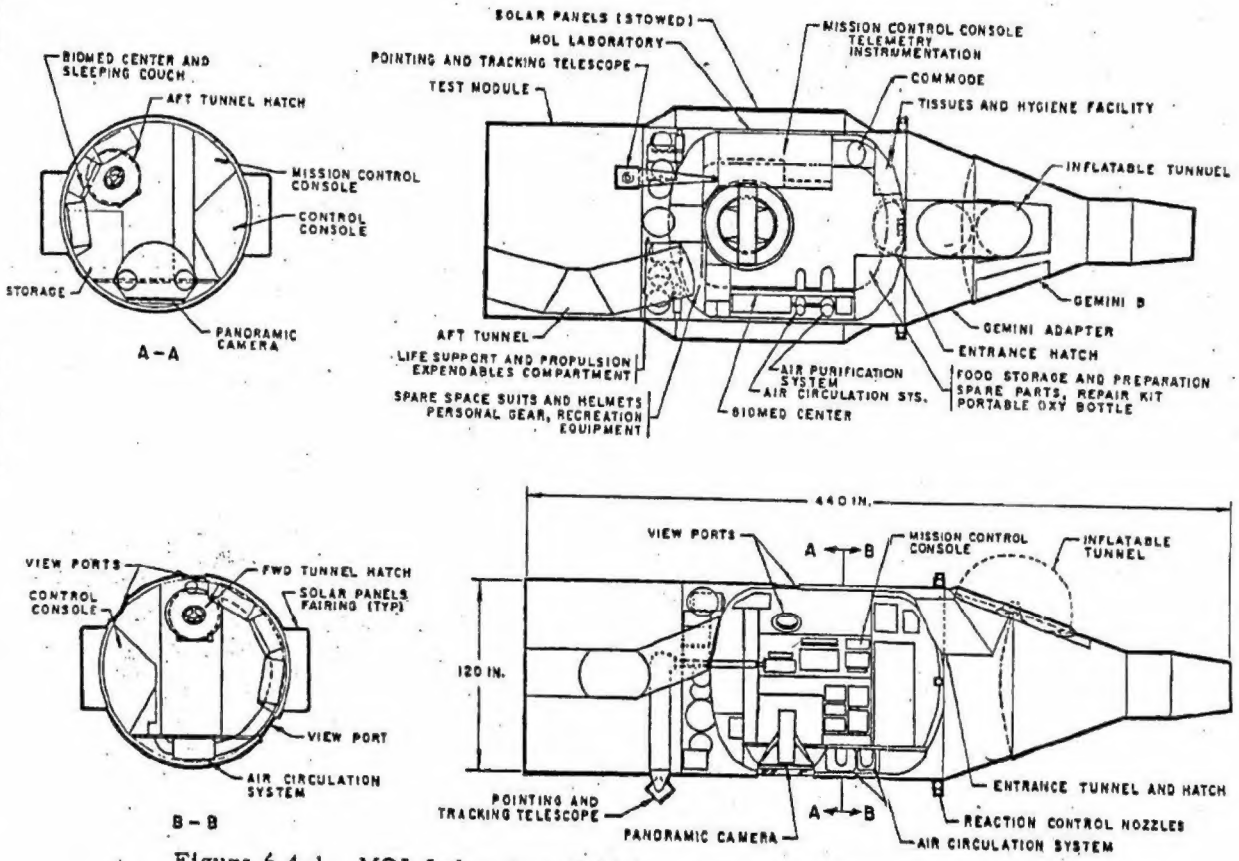


Figure 6.4-1. MOL Laboratory Vehicle - Single Pressure Compartment

This document contains information affecting the national defense of the United States within the meaning of the Espionage Law, Title 18, U.S.C., Section 793 and 794, the transmission of which in any manner to an unauthorized person is prohibited by law.

SECRET

NRO APPROVED FOR RELEASE 10 JUNE 2014

SECRET

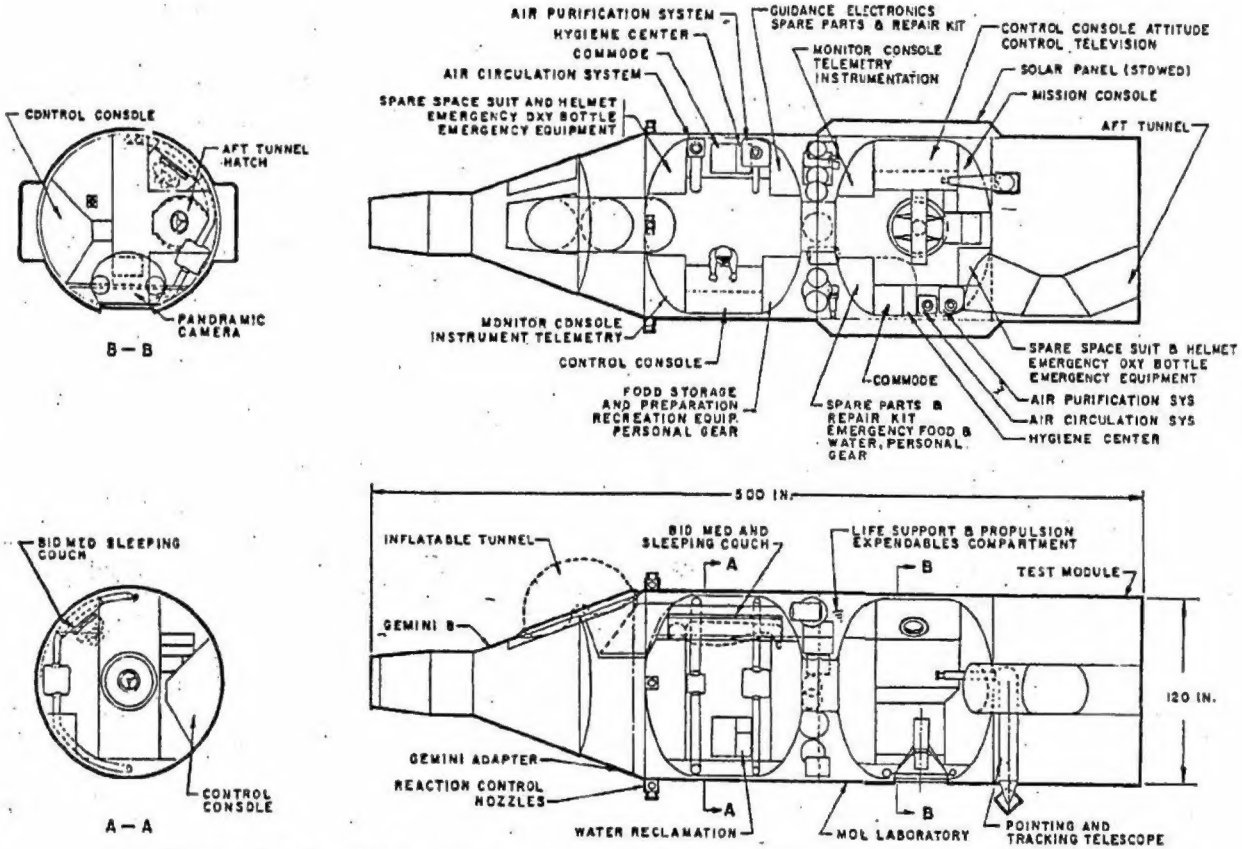


Figure 6.4-2. MOL Laboratory Vehicle - Dual Pressure Compartment

This document contains information affecting the national defense of the United States within the meaning of the Espionage Laws, Title 18, U.S.C., Section 793 and 794, the transmission of which in any manner to an unauthorized person is prohibited by law.



SECRET

NRO APPROVED FOR RELEASE 10 JUNE 2014



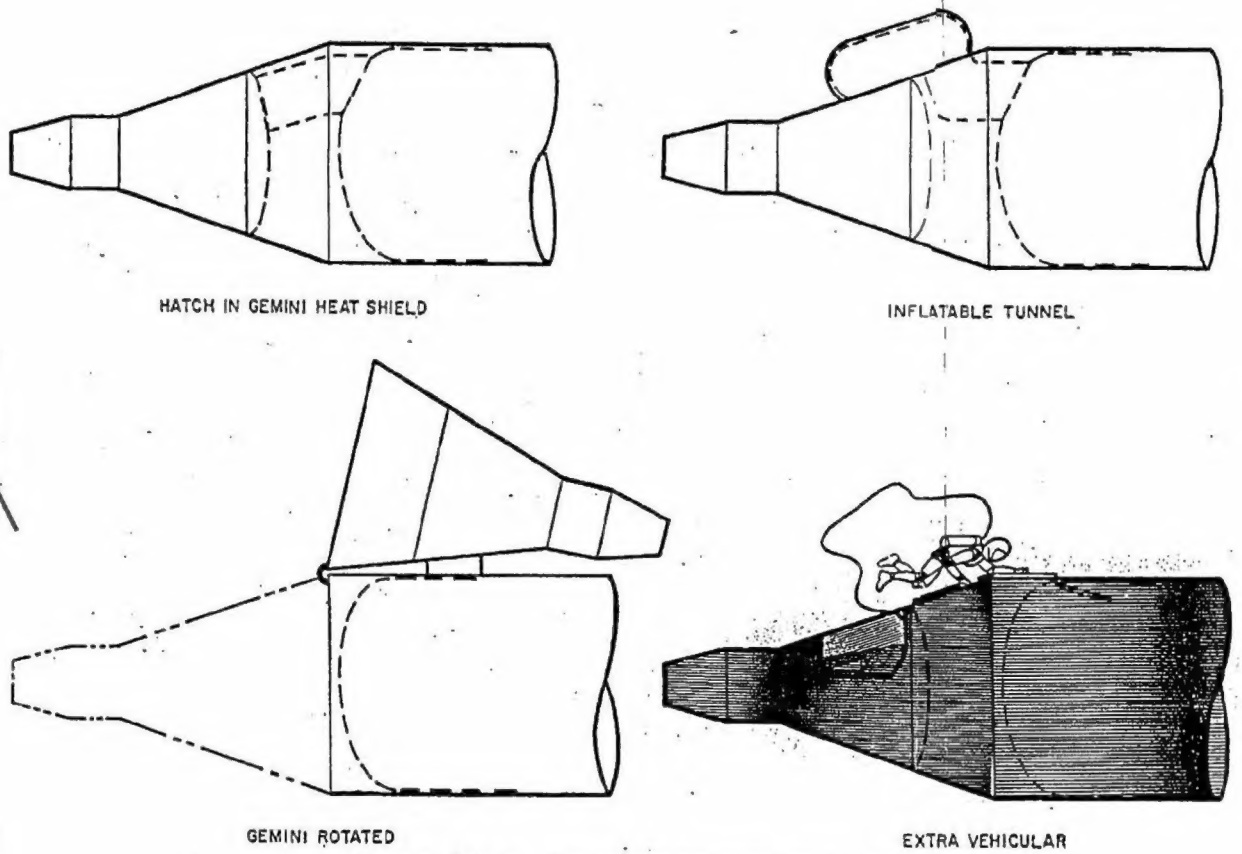


Figure 6.4-3. Astronaut Transfer Concepts





This document contains information affecting the national defense of the United States within the meaning of the Espionage Laws, Title 18, U.S.C., Section 793 and 794, the transmission of which in any manner to an unauthorized person is prohibited by law.

NRO APPROVED FOR RELEASE 10 JUNE 2014



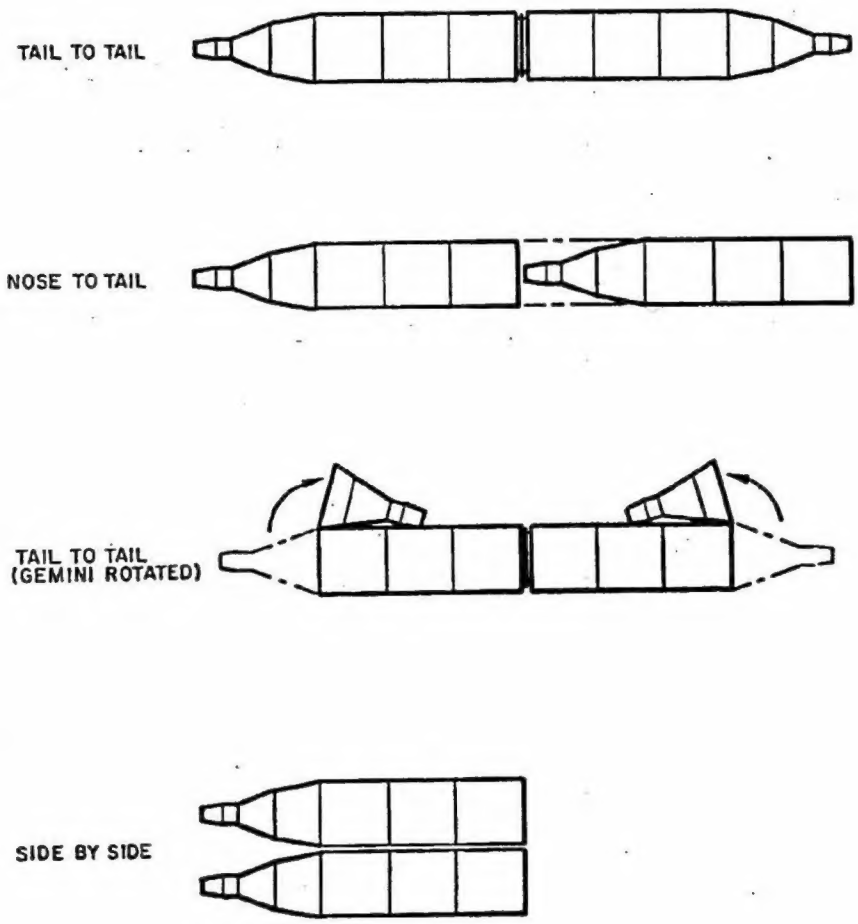


**Figure 6.4-4. Docking and Mooring Concepts**



This document contains information affecting the national defense of the United States within the meaning of the Espionage laws, Title 18, U.S.C., Section 793 and 794, the transmission of which in any manner to an unauthorized person is prohibited by law.

NRO APPROVED FOR RELEASE 10 JUNE 2014

SECRET

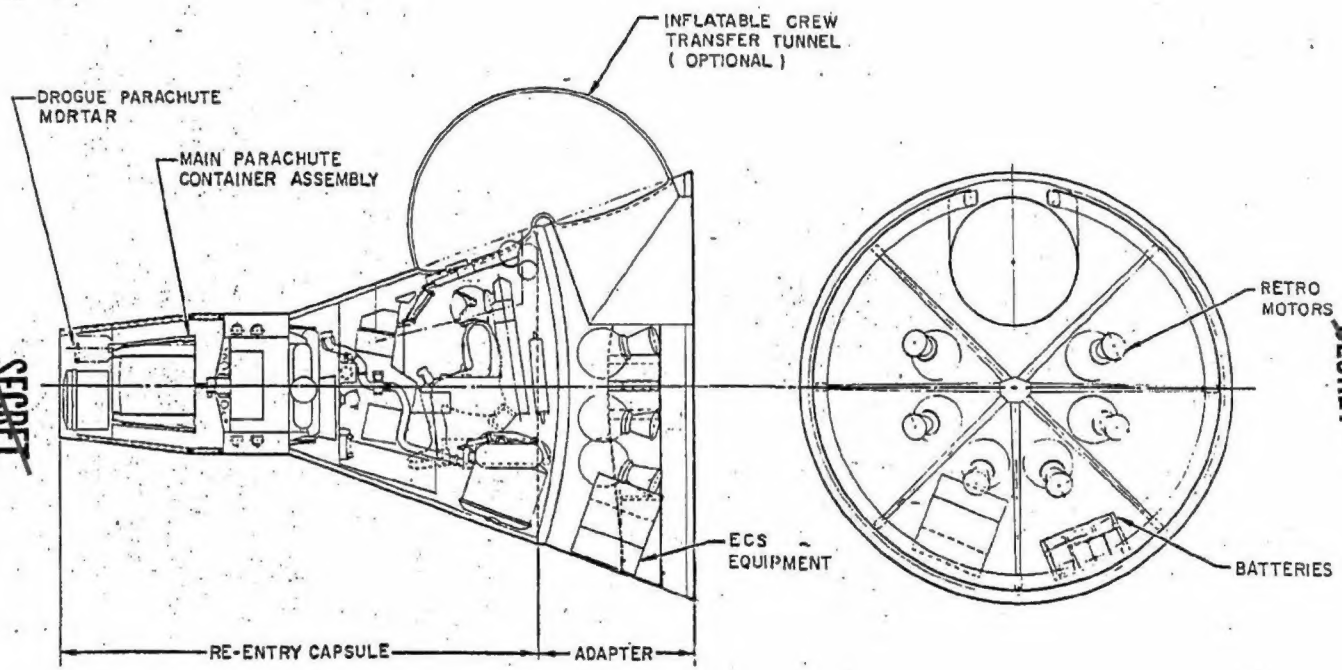


Figure 6.5-1. Gemini B Vehicle

SECRET

This document contains information affecting the national defense of the United States within the meaning of the Espionage Laws, Title 18, U.S.C., Section 793 and 794, the transmission of which in any manner to an unauthorized person is prohibited by law.

NRO APPROVED FOR RELEASE 10 JUNE 2014



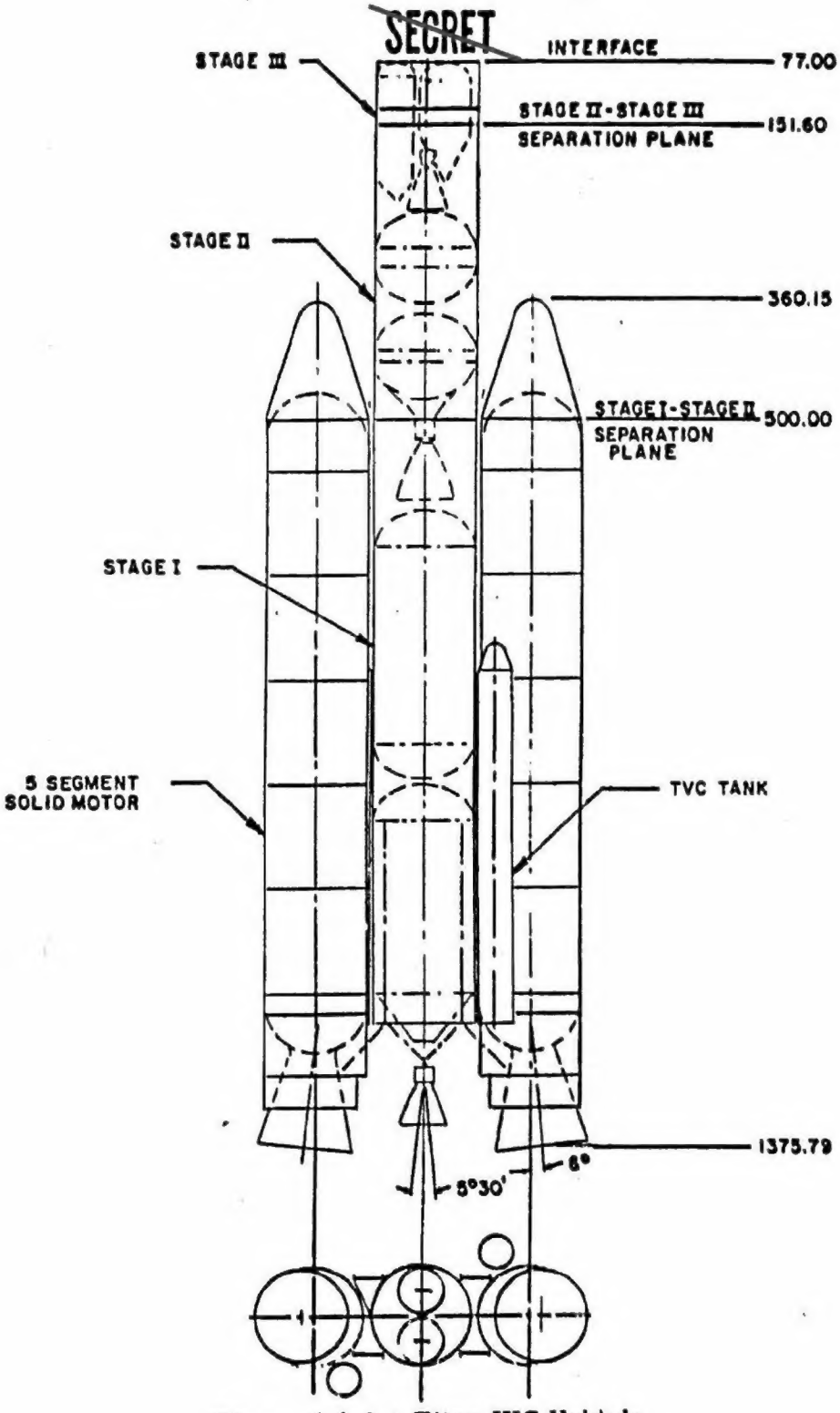


Figure 6.6-1. Titan IIIC Vehicle



This document contains information affecting the national defense of the United States within the meaning of the Espionage Laws, Title 18, U.S.C., Section 793 and 794, the transmission of which in any manner to an unauthorized person is prohibited by law.